LED - DECORATIVE

Brilliant

FAMILY SUITES

LED

1 - 3

1 - 3

1 - 3

Tala

chrome/transparent
metal/glass

1. G83276/15
QT14, G9, 3 x 28W ☑
LED, 18 x 0,07W ☑
↕ 1200mm ↔
⌀ 250mm
4 004353 139321

2. G83269/15
QT14, G9, 6 x 28W ☑
LED, 36 x 0,07W ☑
↕ 1200mm ↔
⌀ 460mm
4 004353 139314

3. G83293/15
QT14, G9, 3 x 28W ☑
LED, 36 x 0,07W ☑
↕ 150mm ↔
⌀ 350mm
4 004353 139338

1

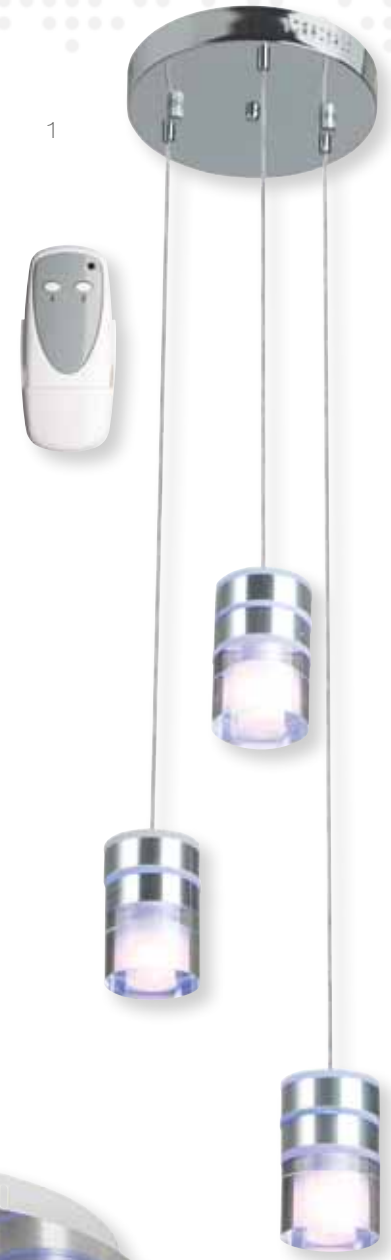

2

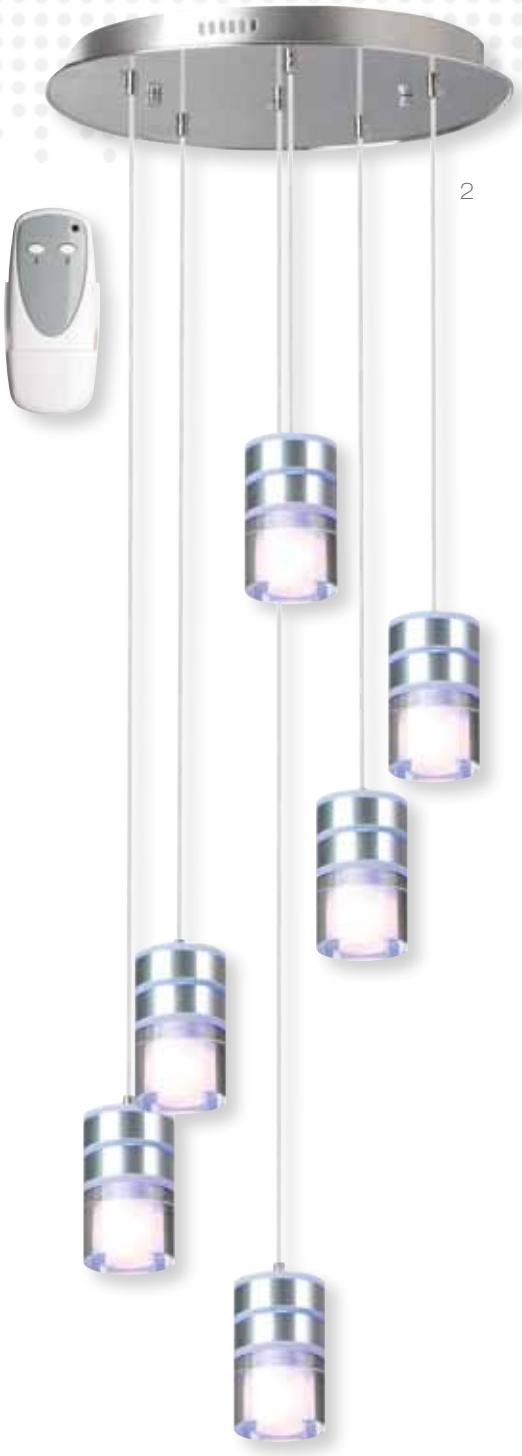

3

ON
OFF
1x ON / OFF = LED
2x ON / OFF = G9
3x ON / OFF = G9 + LED
LED
DECO
HALOGEN
incl.
Brilliant
Tala
chrome/transparent
metal/glass
1. G83210/15
QT14, G9, 1 x 28W
LED, 12 x 0,07W
150mm
120mm
160mm
4 004353 139307
OFF
G9
LED
G9
+
LED

incl. 1 - 3 | LED DECO 1 - 4 | HALOGEN incl. 1 - 4

Talon

chrome/transparent
metal/plastic/glass

1. G93279/15
QT14, G9, 3 x 33W ☑
LED, 18 x 0,07W ☑
↕ 1200mm ↔
⇢ ⌀ 250mm
92529/00, 92534/05
4 004353 118753

2. G93280/15
QT14, G9, 6 x 33W ☑
LED, 36 x 0,07W ☑
↕ 1200mm ↔
⇢ ⌀ 450mm
92529/00, 92534/05
4 004353 118760

3. G81867/15
QT14, G9, 4 x 33W ☑
LED, 24 x 0,07W ☑
↕ 150mm ↔ 365mm
⇢ 365mm ⌀
92529/00, 92534/05
4 004353 121876

4. G81810/15
QT14, G9, 1 x 33W ☑
LED, 12 x 0,07W ☑
↕ 172mm ↔ 160mm
⇢ 102mm ⌀
92529/00
4 004353 122255

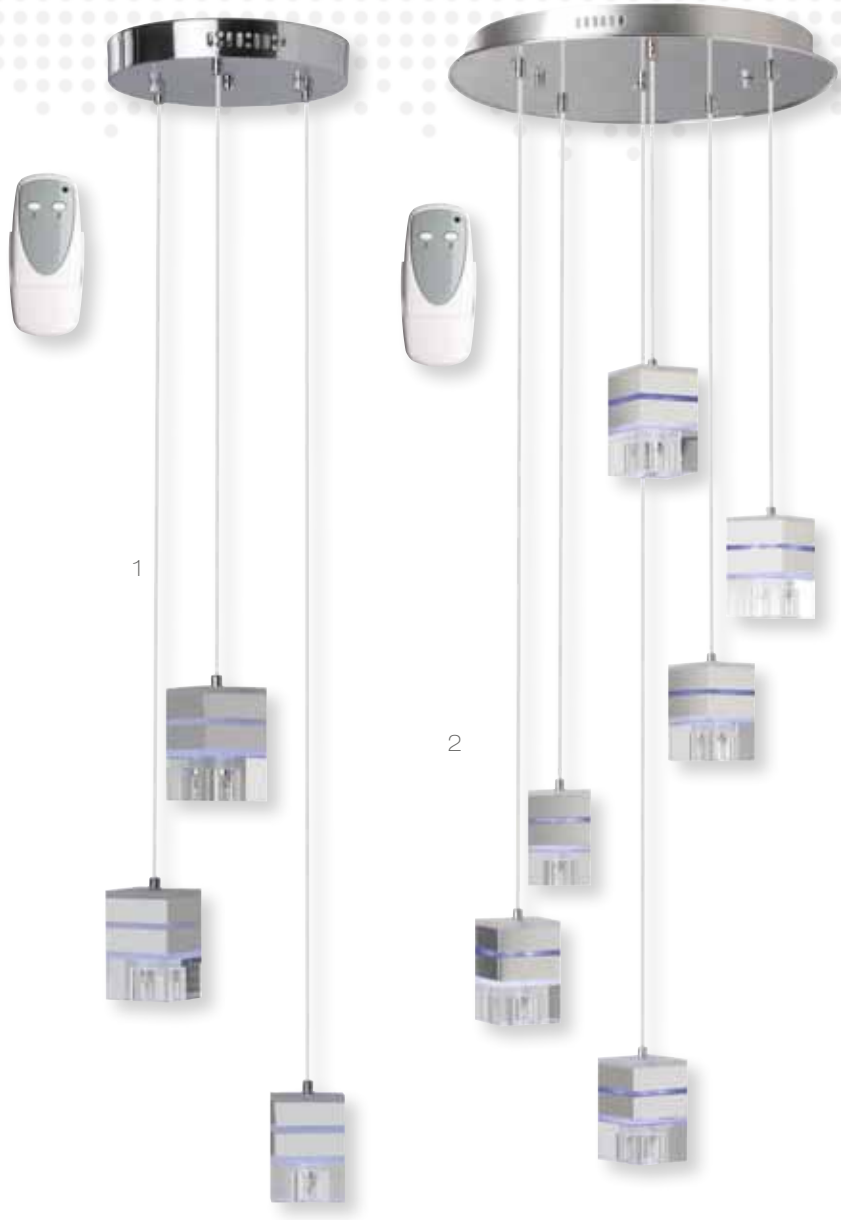

1 - 4

1 - 4

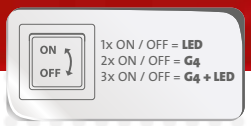

1 - 2

3 - 4

1 - 2

3 - 4

Lucida

chrome/transparent
metal/glass

1

1. G27873/15

QT-LP9, G4, 5 x 20W ☑
LED, 30 x 0,07W ☑
↕ 1350mm ↔ ⌀ 470mm
92494/00

4 004353 115301

2

2. G27876/15

QT-LP9, G4, 3 x 20W ☑
LED, 18 x 0,07W ☑
↕ 1350mm ↔ ⌀ 570mm
92494/00

4 004353 115318

3

3. G27835/15

QT-LP9, G4, 4 x 20W ☑
LED, 48 x 0,07W ☑
↕ 210mm ↔ ⌀ 420mm
92494/00, 92531/06

4 004353 115295

4

4. G27899/15

QT-LP9, G4, 9 x 20W ☑
LED, 84 x 0,07W ☑
↕ 210mm ↔ ⌀ 650mm
92494/00, 92532/06

4 004353 119934

Romenica

satin chrome/transparent
metal/plastic

1. G93294/13

LED, max 2 x 10W ☑
↕ 1300mm ↔ 1000mm
⌀
92514/98

4 004353 121265

Lucio

chrome/transparent
high-grade steel/plastic

2. G93267/15

QT-LP9, G4, 4 x 20W ☑
LED, 48 x 0,07W ☑
↕ max 860mm ↔ 720mm
⌀
92531/06, 92406/00

4 004353 115325

Django

chrome/transparent
metal/glass

1. G12772/15

QT-LP9, G4, 4 x 20W ☑
LED, 4 x (6 x 0,07W) ☑

↕ 1300mm ↔ 850mm
⇢ ⌀

92573/00

4 004353 156762

1

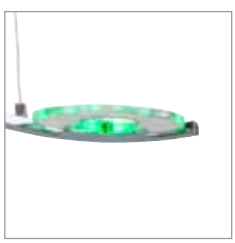

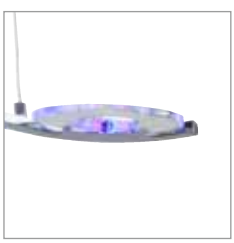

DECORATIVE

Brilliant

FAMILY SUITES

Timothy

chrome/transparent
metal/glass

1. G93318/15

QT-LP9, G4, 10 x 20W

↕ 1300mm ↔
⇢ ⌀ 570mm

92523/00

4 004353 124785

1

↕1300 mm

HALOGEN incl.

1

Fabrizia

chrome/transparent
metal/glass

1. G93338/15

QT-LP9, G4, 19 x 20W

↕ 1765mm ↔ ⌀ 400mm

92570/00

4 004353 134906

FAMILY SUITES

HALOGEN incl.

2 - 5

HALOGEN incl.

1

↕1350 mm

Jewel

chrome/brown
metal/glass

1. G70772/20
QT-LP9, G4, 4 x 35W
↕ 1350mm ↔ 660mm
⇢ ⌀
92559/20, 92406/00
4 004353 133916

2. G70706/20
QT14, G9, 6 x 42W
↕ 160mm ↔
⇢ 160mm ⌀ 640mm
92558/20
4 004353 133886

3. G70764/20
QT14, G9, 4 x 42W
↕ 1560mm ↔
⇢ 260mm ⌀
92558/20
4 004353 133909

4. G70747/20
QT14, G9, 1 x 42W
↕ 370mm ↔
⇢ 150mm ⌀
92558/20
4 004353 133893

3

2

4

incl.

1 - 3

1 - 3

Chromium

chrome
metal/glass

1. G77188/15
QT-LP9, G4, 8 x 20W
↕ 410mm ↔ 600mm
⇢ ⌀ 600mm
92410/00
4 004353 107061

2. G77190/15
QT-LP9, G4, 10 x 20W
↕ 1940mm ↔ 590mm
⇢ ⌀ 590mm
92410/00
4 004353 107078

3. G77193/15
QT-LP9, G4, 3 x 20W
↕ 390mm ↔
⇢ ⌀ 550mm
92519/00
4 004353 107085

1

2

↕1940 mm

3

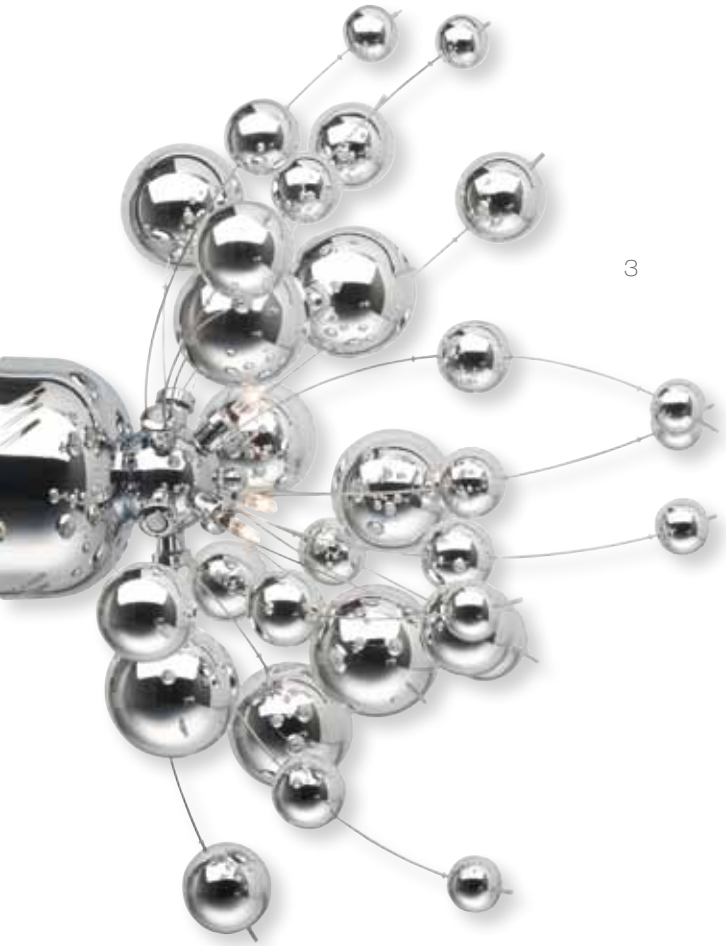

Brilliant

1

↕1800 mm

Mercury

chrome
metal

1. G77273/15

QT14, G9, 5 x 33W ☑
QT14, G9, max 5 x 40W ☐

↕ 1800mm ↔
⌀ 600mm

4 004353 112584

ENERGY SAVING SUITABLE

1 - 2

Du Jour

chrome/black
metal/textile

1. 30710/76

C35, E14 max 1 x 40W
D45, E14 max 1 x 40W

320mm
200mm
140mm

4 004353 083334

2. 30748/76

C35, E14 max 1 x 40W
D45, E14 max 1 x 40W

440mm
210mm

4 004353 083341

1

2

ENERGY SAVING SUITABLE

1 - 4

Flexagon

chrome
metal

1

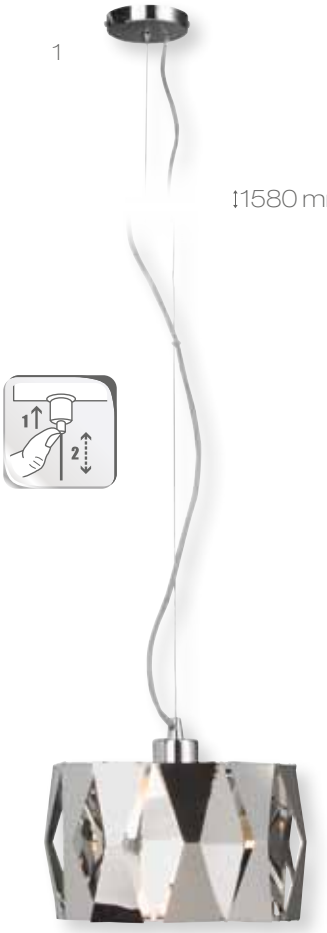

↕1580 mm

2

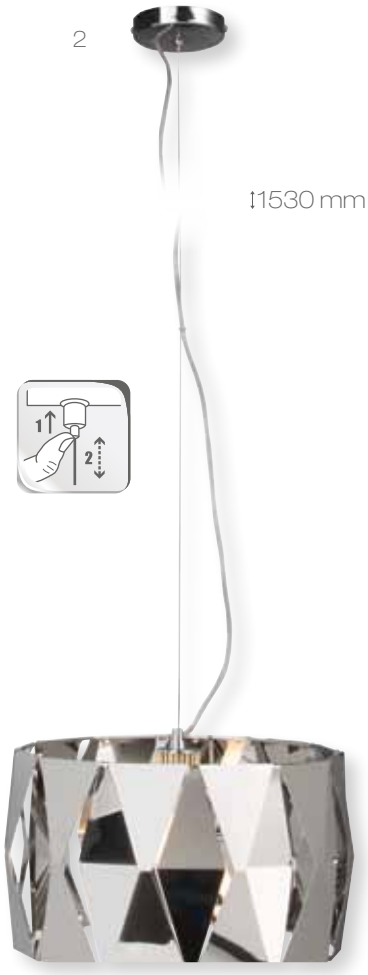

↕1530 mm

1. 54783/15

A60, E27 max 1 x 60W

↕ 1580mm ↔
⇢ ⌀ 260mm

4 004353 107559

2. 54770/15

A60, E27 max 1 x 60W

↕ 1530mm ↔
⇢ ⌀ 390mm

4 004353 107122

3. 54748/15

D45, E14 max 1 x 40W

↕ 460mm ↔
⇢ 270mm ⌀ 260mm

4 004353 107108

4. 54710/15

A60, E27 max 1 x 60W

↕ 220mm ↔ 330mm
⇢ 180mm ⌀

4 004353 107092

3

4

ENERGY SAVING SUITABLE

1 - 4

Solero

chrome/white
metal/glass

1. 93272/75
A60, E27 max 3 x 60W
↕ 1300mm ↔
⇢ ⌀ 460mm
92505/05
4 004353 116490

2. 93864/75
A60, E27 max 3 x 60W
↕ 130mm ↔
⇢ ⌀ 460mm
92505/05
4 004353 116667

3. 93863/75
A60, E27 max 2 x 60W
↕ 130mm ↔
⇢ ⌀ 380mm
92504/05
4 004353 116650

4. 92753/75
A60, E27 max 1 x 40W
↕ 490mm ↔
⇢ ⌀ 300mm
92530/05
4 004353 119910

2

3

4

1

↕1300 mm

HALOGEN incl.

1 - 3

Florentin

chrome/transparent
metal/glass

1. G78372/15

QT14, G9, 4 x 42W

↕ 1400mm ↔ 990mm
⇢ ⌀

92546/00

4 004353 135750

2. G78367/15

QT14, G9, 4 x 42W

↕ 180mm ↔ 580mm
⇢ ⌀ 580mm

92546/00

4 004353 135743

3. G78335/15

QT14, G9, 4 x 42W

↕ 160mm ↔ 360mm
⇢ ⌀ 360mm

92546/00

4 004353 135729

1

2

3

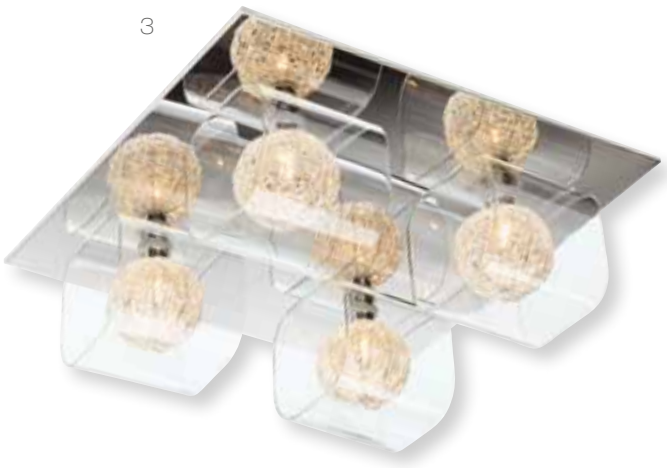

Brilliant

HALOGEN incl.

1 - 2

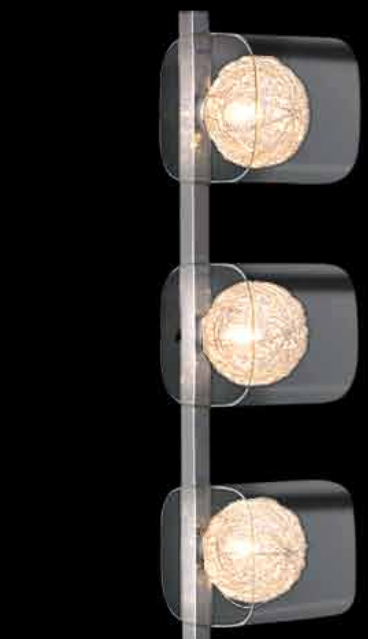

1

Florentin

chrome/transparent
metal/glass

1. G78359/15

QT14, G9, 3 x 42W

↕ 1520mm ↔ 120mm
⇢ 260mm ⌀

92546/00

4 004353 158643

2. G78348/15

QT14, G9, 1 x 42W

↕ 340mm ↔ 120mm
⇢ 155mm ⌀

92546/00

4 004353 135736

incl.

2

HALOGEN incl.

1 - 4

Florence

chrome/white-transparent
metal/glass

1. G13467/15
QT14, G9, 4 x 42W
↕ 190mm ↔ 570mm ⌀ 610mm
92546/00
4 004353 158582

2. G13459/15
QT14, G9, 3 x 42W
↕ 1600mm ↔ 280mm ⌀ 250mm
4 004353 158575

3. G13411/15
QT14, G9, 1 x 42W
↕ 150mm ↔ 90mm ⌀ 140mm
4 004353 158551

4. G13448/15
QT14, G9, 1 x 42W
↕ 320mm ↔ 90mm ⌀ 140mm
4 004353 158568

1

2

3

4

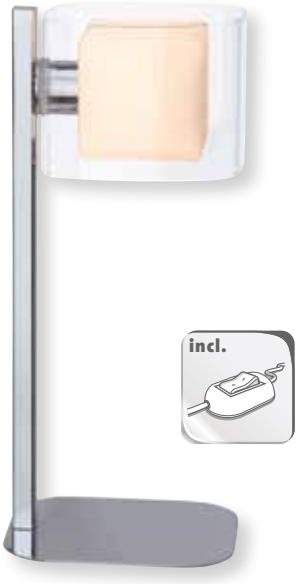

Florence

chrome/white-transparent
metal/glass

5

5. G13469/15

QT14, G9, 6 x 42W

↕ 1250mm ↔ 720mm
⇢ 340mm ⌀

4 004353 158605

6. G13472/15

QT14, G9, 4 x 42W

↕ 1350mm ↔ 930mm
⇢ 110mm ⌀

4 004353 158599

6

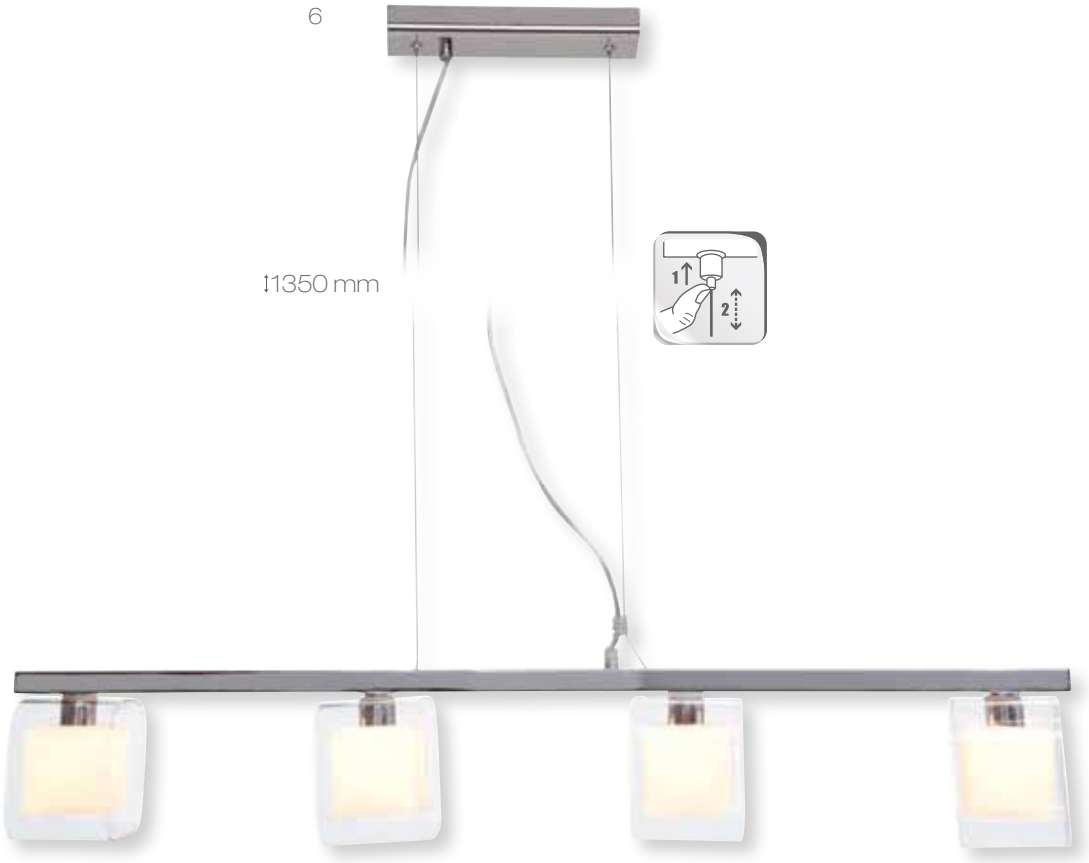

HALOGEN incl.

2 - 4

Belis

chrome
metal

1. G80575/15
QT-LP9, G4 15 x 10W ☑
↕ 1600mm ↔
⇢ ⌀ 440mm
92410/00

4 004353 134036

2. G80590/15
QT14, G9, 10 x 33W ☑
QT14, G9 max 10 x 40W ☐
↕ 400mm ↔
⇢ ⌀ 620mm

4 004353 120930

3. G80593/15
QT14, G9, 3 x 33W ☑
QT14, G9 max 3 x 40W ☐
↕ 380mm ↔ 300mm
⇢ 170mm ⌀

4 004353 120947

4. G80559/15
QT14, G9, 3 x 33W ☑
QT14, G9 max 3 x 40W ☐
↕ 1400mm ↔
⇢ ⌀ 260mm

4 004353 120923

1

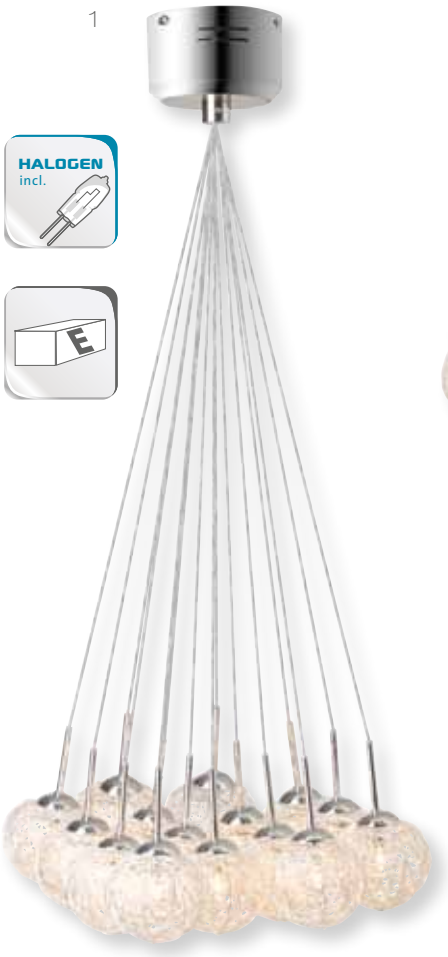

HALOGEN incl.

2

SEE OTHER VERSION ON PAGE 278

3

4

FAMILY SUITES

HALOGEN incl.

2 - 5

Belis

satin chrome/glass transparent
metal/glass

1

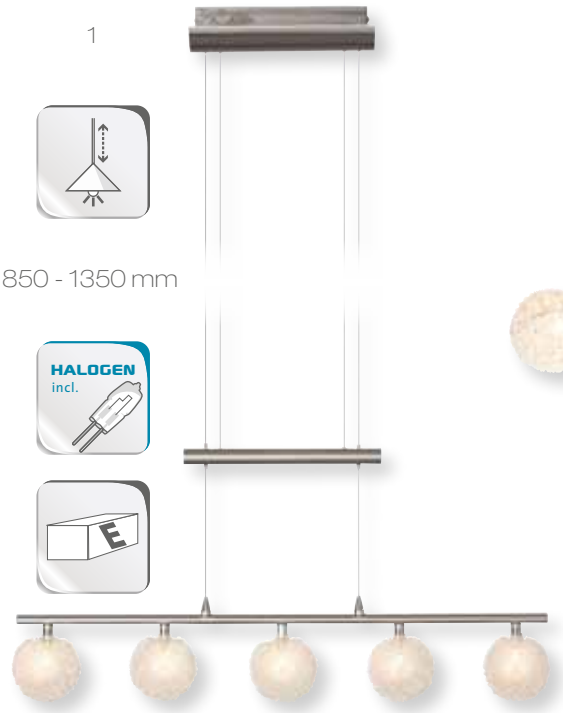

1. G80573/77
QT-LP9, G4, 5 x 20W ☑
↕ max 1350mm ↔ 720mm
⌀
92406/00, 92540/00
4 004353 129643

2

2. G80595/15
QT14, G9, 5 x 33W ☑
QT14, G9 max 5 x 40W ☐
↕ 140mm ↔
⌀ 670mm
4 004353 134647

3

3. G80586/15
QT14, G9, 6 x 33W ☑
QT14, G9 max 6 x 40W ☐
↕ 310mm ↔
⌀ 500mm
4 004353 139765

4

4. G80599/15
QT14, G9, 9 x 33W ☑
QT14, G9 max 9 x 40W ☐
↕ 1350mm ↔
⌀ 620mm
4 004353 139772

5. G80596/15
QT14, G9, 6 x 33W ☑
QT14, G9 max 6 x 40W ☐
↕ 150mm ↔ 870mm
⌀
4 004353 134654

5

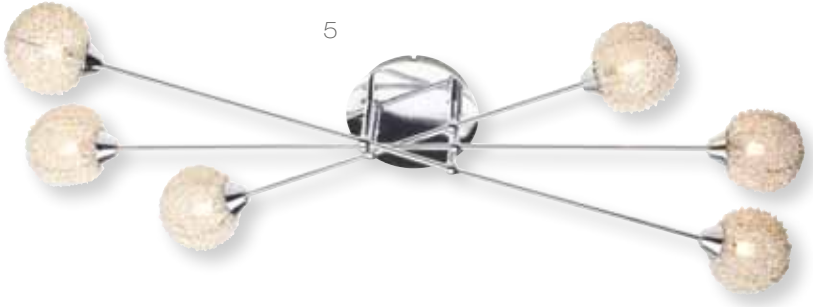

HALOGEN incl.

1 - 3

Belina

chrome/white
metal/glass

1. G93396/05

QT14, G9, 6 x 33W ☑
QT14, G9 max 6 x 40W ☐
↕ 970mm ↔
⇢ ⌀ 640mm

4 004353 159350

2. G93897/05

QT14, G9, 5 x 33W ☑
QT14, G9 max 5 x 40W ☐
↕ 250mm ↔ 400mm
⇢ 670mm ⌀

92557/05

4 004353 127335

3. G92876/05

QT14, G9, 4 x 33W ☑
QT14, G9 max 4 x 40W ☐
↕ 1600mm ↔
⇢ 275mm ⌀

4 004353 155031

1

↕970 mm

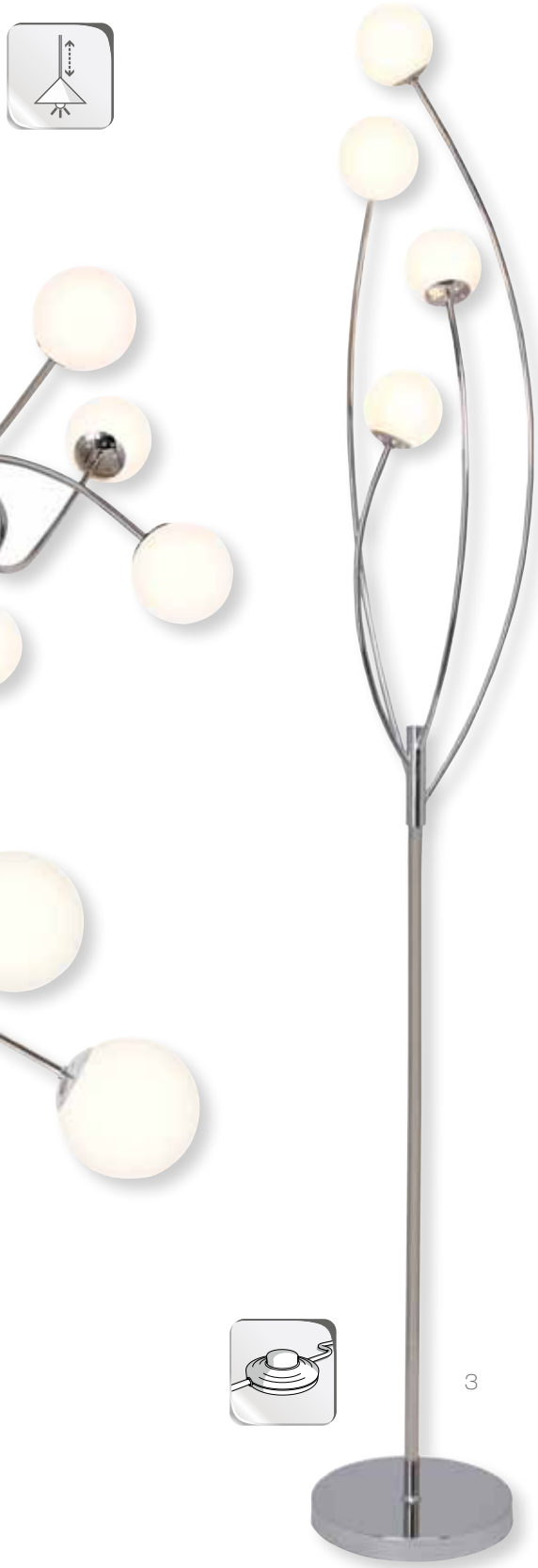

2

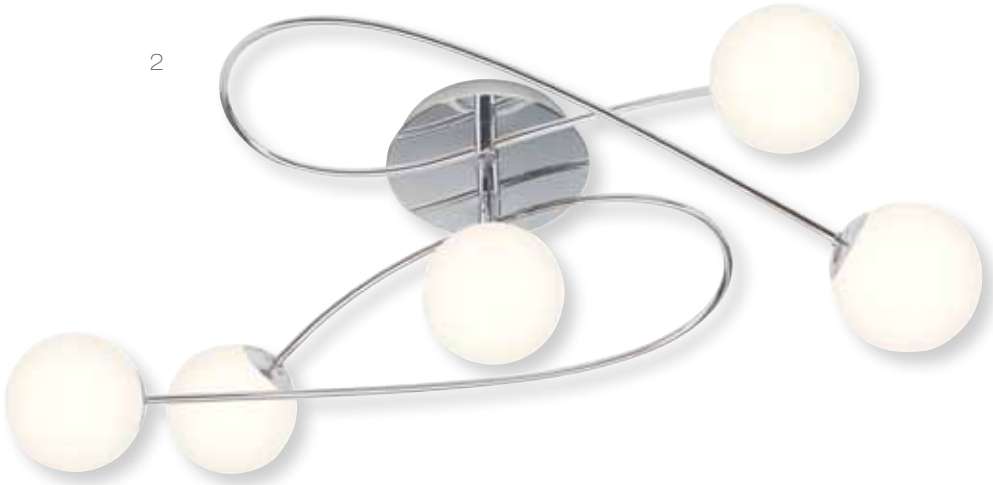

3

Belina

chrome/white
metal/glass

1. G92875/05

QT14, G9, 2 x 33W ☑
QT14, G9 max 2 x 40W ☐

↕ 350mm ↔ 170mm

4 004353 155024

1 - 3

1 - 5

Mystique

chrome/transparent
metal/glass

1. G19369/15
QT-LP9, G4, 6 x 20W
↕ 770mm ↔ 280mm
⇢ ⌀
92456/00, 92414/00
4 004353 106965

2. G19393/15
QT-LP9, G4, 3 x 20W
↕ 380mm ↔ 310mm
⇢ 180mm ⌀
92456/00, 92519/05
4 004353 106989

3. G19390/15
QT-LP9, G4, 10 x 20W
↕ 408mm ↔ 738mm
⇢ ⌀ 738mm
92456/00, 92410/00
4 004353 106972

4. G19359/15
QT-LP9, G4, 3 x 20W
↕ 1400mm ↔
⇢ 320mm ⌀
92456/00
4 004353 106958

5. G19348/15
QT-LP9, G4, 1 x 20W
↕ 170mm ↔ 130mm
⇢ ⌀
92456/00
4 004353 106941

1

2

3

5

4

1 - 2

1 - 2

Dominica

satin chrome/transparent
metal/glass

1

1. G73790/13

QT-LP9, G4, 5 x 20W

↕ 1040mm ↔ 260mm

91608/00, 92406/00

4 004353 048821

2. G73773/13

QT-LP9, G4, 5 x 20W

↕ max 1400mm ↔ 730mm

91608/00, 92406/00

4 004353 048814

2

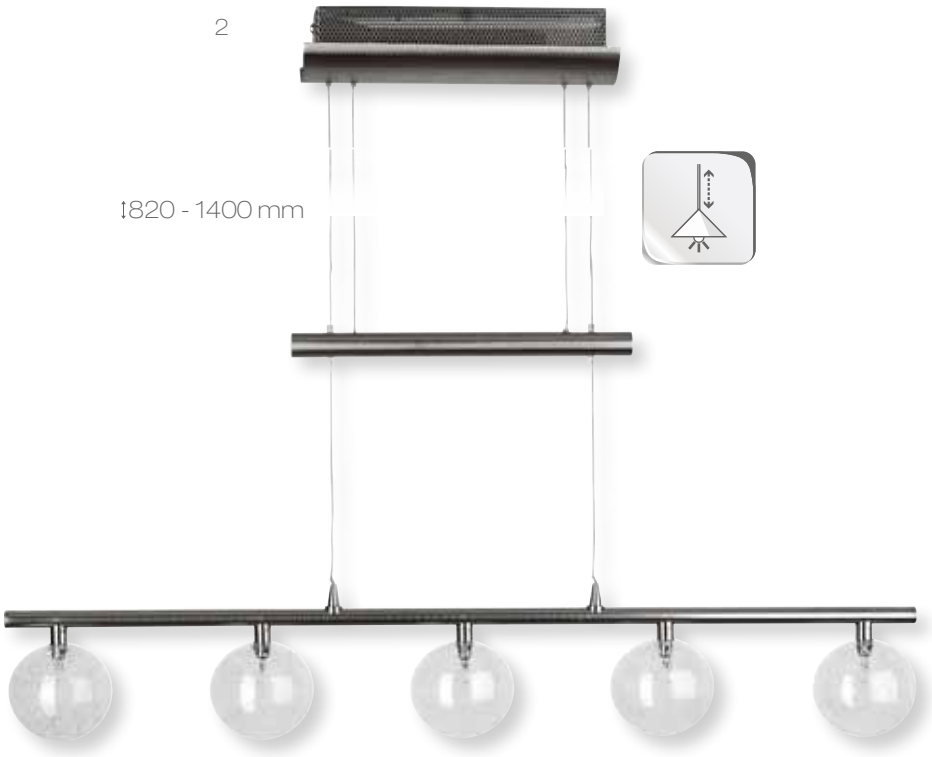

FAMILY SUITES

HALOGEN incl.

1 - 4

Isia

chrome/transparent
metal/glass

1. G09070/15

QT14, G9, 1 x 28W ☑
QT14, G9 max 1 x 40W ☐
↕ 1300mm ↔
⇢ ⌀ 100mm

4 004353 155000

2. G09073/15

QT14, G9, 5 x 28W ☑
QT14, G9 max 5 x 40W ☐
↕ 1200mm ↔
⇢ ⌀ 250mm

4 004353 155017

3. G09010/15

QT14, G9 1 x 28W ☑
QT14, G9 max 1 x 40W ☐
↕ 150mm ↔ 110mm
⇢ 150mm ⌀

4 004353 154980

4. G09048/15

QT14, G9, 1 x 28W ☑
QT14, G9 max 1 x 40W ☐
↕ 330mm ↔
⇢ ⌀

4 004353 154997

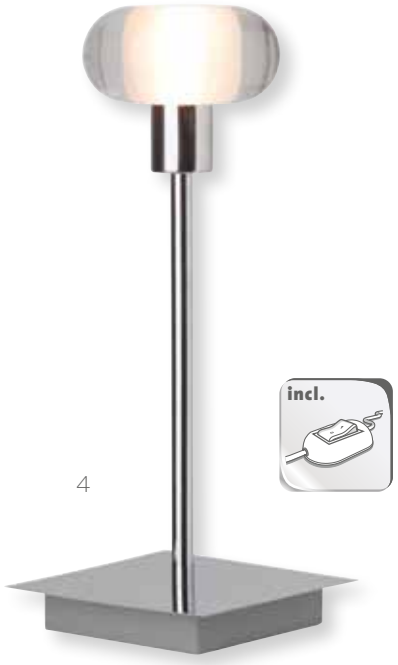

HALOGEN incl.

1 - 5

Julie

satin chrome/transparent
metal/glass

1

1. G93202/15

QT14, G9, 5 x 33W ☑
QT14, G9 max 5 x 40W ☐
↕ 1350mm ↔
⇢ ⌀ 260mm
92537/00

4 004353 055256

2

2. G71006/13

QT14, G9, 6 x 33W ☑
QT14, G9 max 6 x 40W ☐
↕ 300mm ↔
⇢ ⌀ 720mm
92547/00

4 004353 133992

3. G71067/13

QT14, G9, 4 x 33W ☑
QT14, G9 max 4 x 40W ☐
↕ 105mm ↔ 250mm
⇢ ⌀
92547/00

4 004353 134029

3

4. G71010/13

QT14, G9, 1 x 33W ☑
QT14, G9 max 1 x 40W ☐
↕ 125mm ↔
⇢ 170mm ⌀ 115mm
92547/00

4 004353 153129

4

5. G71059/13

QT14, G9, 3 x 33W ☑
QT14, G9 max 3 x 40W ☐
↕ 1520mm ↔
⇢ ⌀ 420mm
92547/00

4 004353 134012

5

Julie

satin chrome/transparent
metal/glass

1

1. G71042/13

QT14, G9, 2 x 33W ☑
QT14, G9 max 2 x 40W ☐

↕ 430mm ↔ 270mm

92547/00

4 004353 134005

1 - 3

ENERGY SAVING SUITABLE

1 - 3

Amira

satin chrome/chrome/white
metal/glass

1. 77379/77

D45, E14 max 1 x 40W

↕ max 1500mm ↔ ⌀ 180mm

92561/05

4 004353 132568

2. 77371/77

D45, E14 max 2 x 40W

↕ max 1500mm ↔ 640mm

92561/05

4 004353 132544

3. 77376/77

D45, E14 max 3 x 40W

↕ max 1500mm ↔ 840mm

92561/05

4 004353 132551

1

↕800 - 1500mm

2

↕800 - 1500mm

3

↕800 - 1500mm

ENERGY SAVING SUITABLE

Brilliant

1

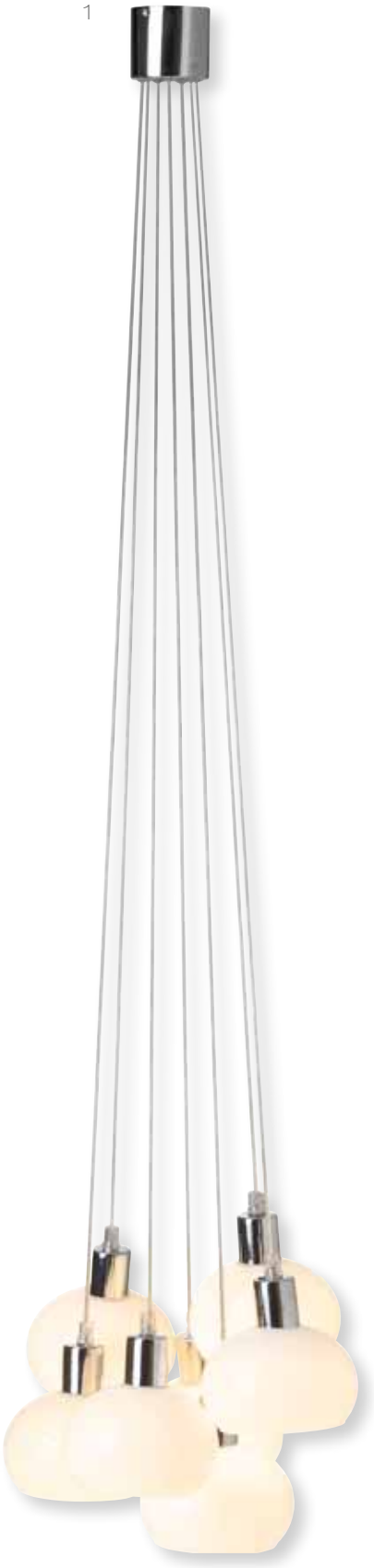

Dafne

chrome/white
metal/glass

1. 93264/75

D45, E14 max 7 x 40W

↕ 1600mm ↔

⌀ 330mm

92486/05

4 004353 114472

HALOGEN incl. E14

1 - 3

Enzio

satin chrome/white alabaster
metal/glass

1. G66493/13

QD45, E14, 3 x 28W
D45, E14 max 3 x 40W

↕ max 1200mm ↔ 910mm
⇢ ⌀

92418/94, 90537/00

4 004353 090035

2. G66410/13

QD45, E14, 1 x 28W
D45, E14 max 1 x 40W

↕ 250mm ↔ 120mm
⇢ 310mm ⌀ 220mm

92417/94, 90537/00

4 004353 089893

3. G66456/13

QD45, E14, 2 x 28W
D45, E14 max 2 x 40W

↕ 1320mm ↔ 725mm
⇢ ⌀ 250mm

92417/94, 90537/00

4 004353 102974

1

2

3

HALOGEN incl. E14

1 - 4

Enzio

satin chrome/white alabaster
metal/glass

1

2

1. G66472/13
QD45, E14, 4 x 28W ☑
D45, E14 max 4 x 40W ☐
↕ max 1100mm ↔ 1100mm
⇢ 400mm ⌀ 220mm
92418/94, 90537/00
4 004353 089954

2. G66476/13
QD45, E14, 3 x 28W ☑
D45, E14 max 3 x 40W ☐
↕ 1050mm ↔
⇢ ⌀ 460mm
92418/94, 90537/00
4 004353 089992

3. G66451/13
QD45, E14, 1 x 28W ☑
D45, E14 max 1 x 40W ☐
↕ 380mm ↔ 120mm
⇢ 240mm ⌀
92417/94, 90537/00
4 004353 089930

4. G66447/13
QD45, E14, 1 x 28W ☑
D45, E14 max 1 x 40W ☐
↕ 340mm ↔
⇢ ⌀ 160mm
92418/94, 90537/00
4 004353 089916

SEE OTHER COLOUR ON PAGE 86-87, 140-141

3

4

HALOGEN incl. E14

1 - 3

Enzio

brushed brass/white thin strip metal/glass

1. G66472/18

QD45, E14, 4 x 28W
D45, E14 max 4 x 40W

↕ max 1100mm ↔ 1100mm
⇢ 400mm ⌀ 220mm

92418/94, 90537/00

4 004353 089961

2. G66493/18

QD45, E14, 3 x 28W
D45, E14 max 3 x 40W

↕ max 1200mm ↔ 910mm
⇢ ⌀

92418/94, 90537/00

4 004353 090042

3. G66451/18

QD45, E14, 1 x 28W
D45, E14 max 1 x 40W

↕ 380mm ↔ 120mm
⇢ 240mm ⌀

92417/94, 90537/00

4 004353 089947

1

2

3

SEE OTHER COLOUR ON PAGE 84-85, 140-141

HALOGEN incl. E14

1 - 2

1

↕1050 mm

Enzio

brushed brass/white thin strip
metal/glass

1. G66476/18

QD45, E14, 3 x 28W ☑
D45, E14 max 3 x 40W ☐

↕ 1050mm ↔
⇢ ⌀ 460mm

90647A05, 90647A05

4 004353 090004

2. G66447/18

QD45, E14, 1 x 28W ☑
D45, E14 max 1 x 40W ☐

↕ 340mm ↔
⇢ ⌀ 160mm

92418/94, 90537/00

4 004353 089923

2

1 - 2 | 1 - 2 | HALOGEN incl. 1 - 2

Los Angeles

satin chrome/white
metal/glass

1. G72269/13
QT-LP9, G4, 6 x 20W
↕ 1500mm ↔ 750mm
⌀
91685/94, 92401/00
4 004353 052941

2. G72274/13
QT-LP9, G4, 6 x 20W
↕ 1500mm ↔
⌀ 500mm
91685/94, 92401/00
4 004353 054655

3. G72247/13
QT14, G9, 1 x 33W
QT14, G9 max 1 x 40W
↕ 400mm ↔
⌀ 110mm
91703/91
4 004353 058561

1

↕1037 - 1500 mm

2

↕1500 mm

HALOGEN incl.

3

SEE OTHER COLOUR ON PAGE 132,134

1 - 4 | 1 - 4 | HALOGEN incl. 1 - 4

Antwerpen
metal/glass

1

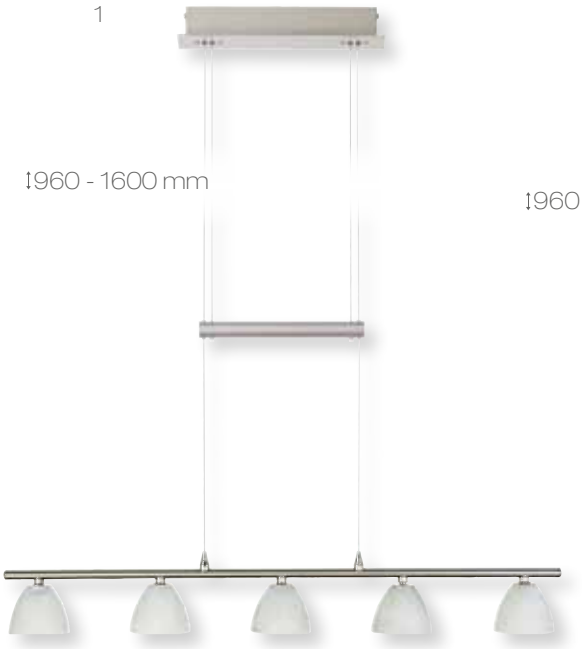

2

1. G70273/13
brushed nickel/white-alabaster
QT-LP9, G4, 5 x 20W
↕ max 1600mm ↔ 720mm
91600/94
4 004353 048418

2. G70276/13
brushed nickel/white-alabaster
QT-LP12, GY6,35 3 x 35W
↕ max 1600mm ↔ 570mm
91615/94
4 004353 048425

3

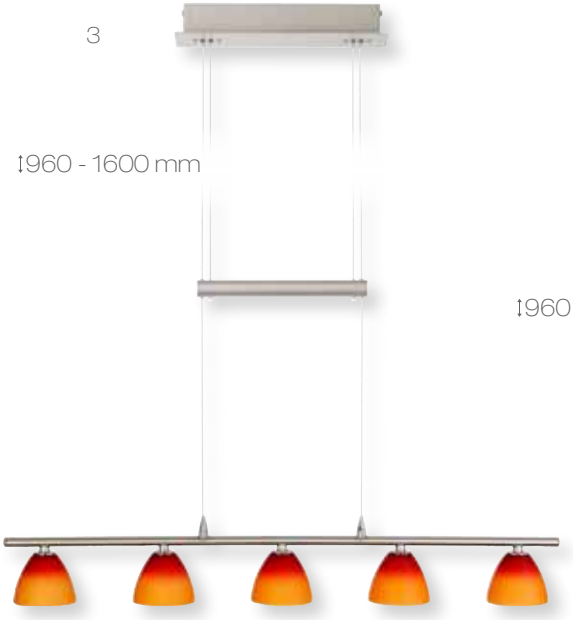

3. G70273/07
satin chrome/red-orange
QT-LP9, G4, 5 x 20W
↕ max 1600mm ↔ 720mm
91685/07
4 004353 061677

4

4. G70273/25
satin chrome/white-strip
QT-LP9, G4, 5 x 20W
↕ max 1600mm ↔ 720mm
91615/07
4 004353 088278

SEE OTHER COLOUR ON PAGE 133,135

ENERGY SAVING SUITABLE

1 - 4

Clarie

satin chrome/white
metal/textile

1. 13291/05

A60, E27 max 1 x 60W

↕ 330mm ↔
⇢ ⌀ 400mm

4 004353 158674

2. 93374/05

A60, E27 max 1 x 60W

↕ 1000mm ↔
⇢ ⌀ 400mm

4 004353 149450

3. 13258/05

A60, E27 max 1 x 60W

↕ 1760mm ↔
⇢ 950mm ⌀ 370mm

4 004353 158650

Trial

white
metal/textile

4. 93377/05

A60, E27 max 3 x 60W

↕ 900mm ↔ 450mm
⇢ ⌀

4 004353 158698

1

2

↕1000 mm

4

3

Clarie

black
metal/textile

1. 93374/06

A60, E27 max 1 x 60W

1000mm

400mm

4 004353 149467

ENERGY SAVING SUITABLE

1 - 4

Clarie

satin chrome/grey
metal/textile

1. 13291/22

A60, E27 max 1 x 60W
↕ 330mm ↔
⇢ ⌀ 400mm

4 004353 158681

2. 93374/22

A60, E27 max 1 x 60W
↕ 1000mm ↔
⇢ ⌀ 400mm

4 004353 149474

3. 13258/22

A60, E27 max 1 x 60W
↕ 1760mm ↔
⇢ 950mm ⌀ 370mm

4 004353 158667

Trial

grey
metal/textile

4. 93377/22

A60, E27 max 3 x 60W
↕ 900mm ↔ 450mm
⇢ ⌀

4 004353 149573

1

2

↕1000 mm

4

3

Trial

multi-coloured
metal/textile

1. 93377/72

A60, E27 max 3 x 60W

900mm 450mm

4 004353 149580

ENERGY SAVING SUITABLE

1 - 3

Sandra

satin chrome/white
metal/textile

1. 85073/75

D45, E14 max 5 x 40W

↕ 1450mm ↔
⇢ ⌀ 520mm

4 004353 141515

2. 85058/75

A60, E27 max 1 x 60W

↕ 1580mm ↔
⇢ ⌀ 200mm

4 004353 141508

3. 85010/75

D45, E14 max 1 x 40W

↕ 180mm ↔
⇢ 185mm ⌀ 150mm

4 004353 141492

1

3

2

ENERGY SAVING SUITABLE

1 - 3

Sandra

satin chrome/black
metal/textile

2

↕1450 mm

1

3

1. 85073/76

D45, E14 max 5 x 40W

↕ 1450mm ↔
⇢ ⌀ 520mm

4 004353 158506

2. 85058/76

A60, E27 max 1 x 60W

↕ 1580mm ↔
⇢ ⌀ 200mm

4 004353 158490

3. 85010/76

D45, E14 max 1 x 40W

↕ 180mm ↔
⇢ 185mm ⌀ 150mm

4 004353 152818

ENERGY SAVING SUITABLE

1 - 3

Branka

satin chrome/white
metal/plastic

1. 56670/05

A60, E27 max 1 x 60W

↕ 1500mm ↔

⇢ ⌀ 310mm

4 004353 120404

2. 56658/05

A60, E27 max 1 x 60W

↕ 1600mm ↔

⇢ ⌀ 360mm

4 004353 120398

1

2

incl.
ENERGY SAVING SUITABLE
Brilliant
Branka
satin chrome/white
metal/plastic
3
1.56647/05
D45, E14 max 1 x 40W
450mm
200mm
4 004353 120381

1 - 4

1 - 4

Maira

chrome/transparent
metal/glass

1. G14773/15
QT4-LP9, G4, 5 x 20W
↕ 1450mm ↔
⇢ ⌀ 410mm
4 004353 158452

2. G14710/15
QT4-LP9, G4, 1 x 20W
↕ 510mm ↔ 110mm
⇢ 250mm ⌀
4 004353 158438

3. G14772/15
QT4-LP9, G4, 4 x 20W
↕ 1450mm ↔ 120mm
⇢ 710mm ⌀
4 004353 158445

4. G14776/15
QT4-LP9, G4, 3 x 20W
↕ 1450mm ↔
⇢ ⌀ 330mm
4 004353 158469

1

2

3

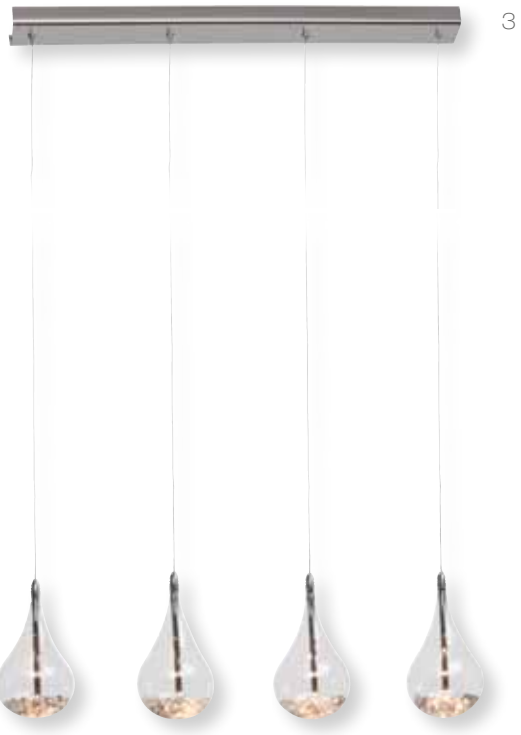

4

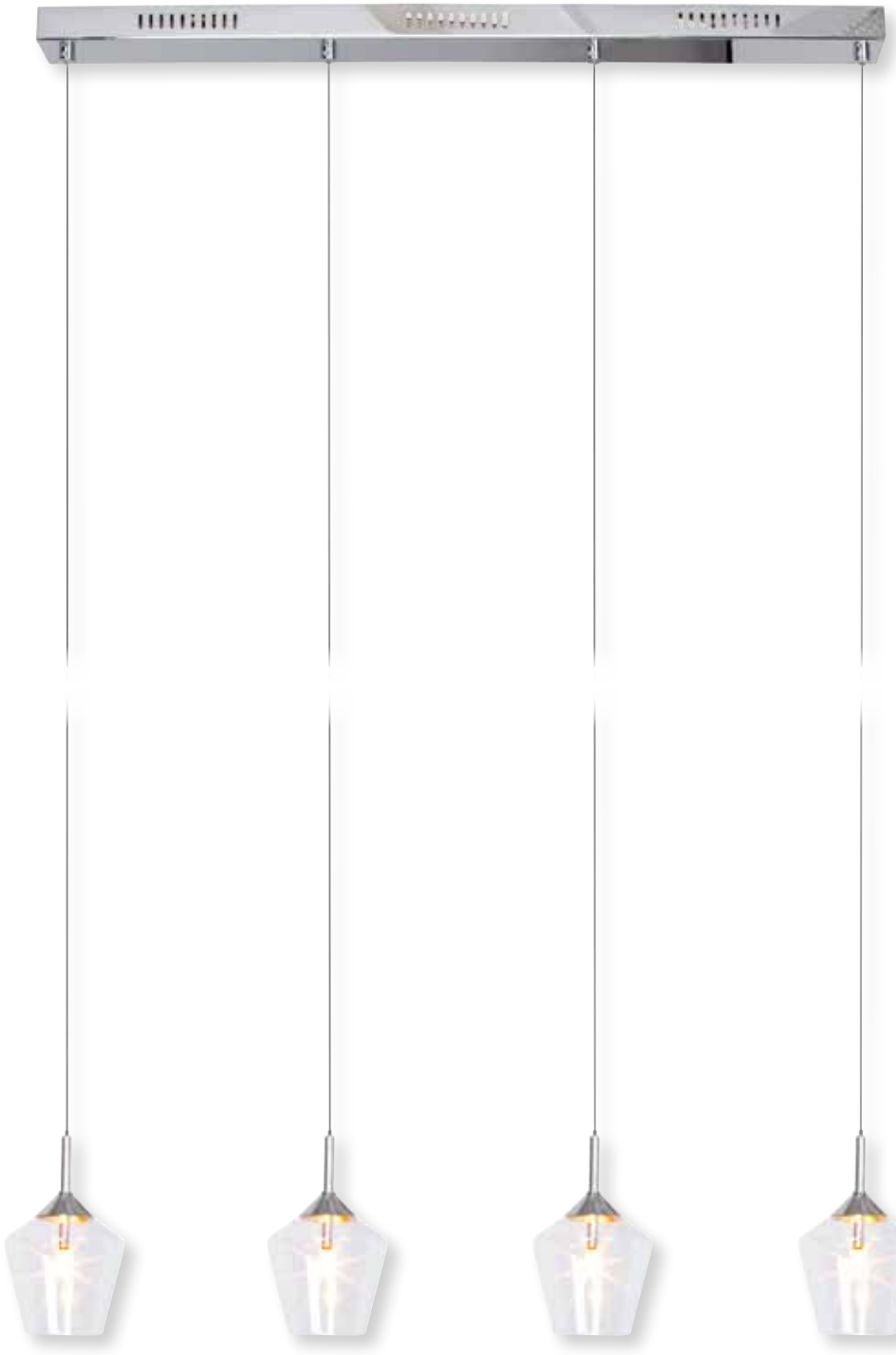

Mathi

chrome/transparent
metal/glass

1. G93402/15

QT4-LP9, G4, 4 x 20W

↕ 1500mm ↔ 1050mm

92569/00

4 004353 163227

HALOGEN incl.

1 - 3

Varena

chrome/transparent
metal/glass

1. G18273/15

QT14, G9, 5 x 42W

↕ max 910mm ↔ 965mm
⇢ 145mm ⌀

4 004353 159176

2. G18298/15

QT14, G9, 1 x 42W

↕ 120mm ↔ 145mm
⇢ 120mm ⌀ 145mm

4 004353 159190

3. G18293/15

QT14, G9, 3 x 42W

↕ 120mm ↔
⇢ ⌀ 400mm

4 004353 159183

1

↕860 - 910mm

2

3

1 - 2

1 - 2

1

Anastasia

chrome/transparent
metal/glass

1. G75893/15

QT-LP9, G4, 3 x 20W

↕ 400mm ↔ 400mm
⇢ 240mm ⌀

92341/00

4 004353 068645

2

2. G75892/15

QT-LP9, G4,12 x 10W

↕ 1000mm ↔ 1200mm
⇢ ⌀

92341/00, 92343/15

4 004353 068638

1 - 5

HALOGEN incl.

1 - 5

Nash

chrome/transparent
metal/glass

1. G82592/15
QT-LP9, G4, 12 x 10W
↕ 1250mm ↔ ⌀ 500mm
92344/15, 92414/00
4 004353 063084

2. G82506/15
QT-LP9, G4, 6 x 10W
↕ 260mm ↔ ⌀ 420mm
92344/15, 99920/00
4 004353 074882

3. G82595/15
QT-LP9, G4, 5 x 10W
↕ 565mm ↔ ⌀ 155mm
92344/15
4 004353 066627

4. G82593/15
QT-LP9, G4, 3 x 20W
↕ 400mm ↔ 180mm ⌀ 130mm
92344/15, 92519/05
4 004353 063091

5. G82552/15
QT-LP9, G4, 12 x 10W
↕ 1600mm ↔ ⌀ 400mm
92344/15
4 004353 066610

1

↕1250 mm

2

3

4

5

Nash XXL

chrome/transparent
metal/glass

1. G93328/15

QT-LP9, G4, 48 x 10W

1700mm

1200mm

4 004353 130656

1 - 3

1 - 3

Gardina

chrome
metal

1. G57392/15
QT-LP9, G4, 12 x 10W
↕ 1050mm ↔ ⌀ 550mm
92414/00
4 004353 060397

2. G57390/15
QT-LP9, G4, 12 x 10W
↕ 260mm ↔ ⌀ 650mm
92414/00
4 004353 060380

3. G57393/15
QT-LP9, G4, 3 x 20W
↕ 420mm ↔ 230mm
⇢ 60mm ⌀
92519/05
4 004353 060403

1

↕1050 mm

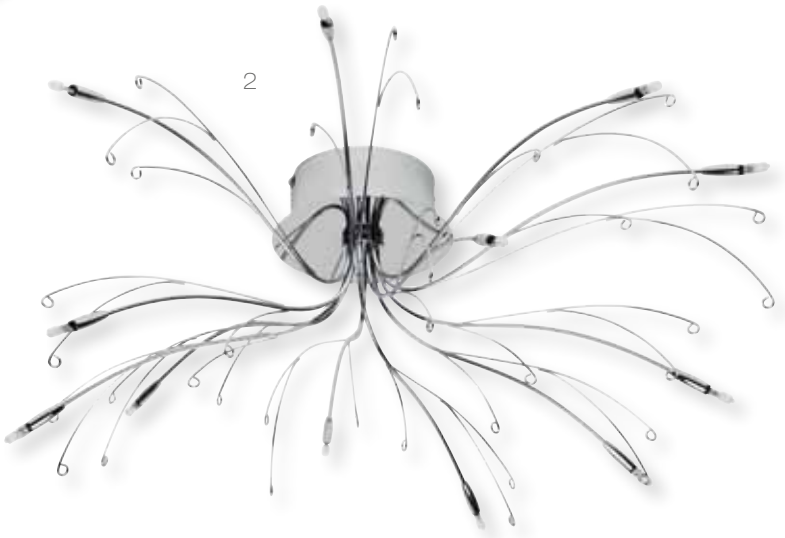
2

3

1 - 3

1 - 3

Mareline

satin chrome/transparent
metal/glass

1

1. G85793/13

QT-LP9, G4, 3 x 20W

↕ 250mm ↔ 350mm
⇢ 300mm ⌀

92348/00, 92519/05

4 004353 110771

2

2. G93239/13

QT-LP9, G4, 12 x 10W

↕ 250mm ↔
⇢ ⌀ 590mm

92348/00, 92414/00

4 004353 086298

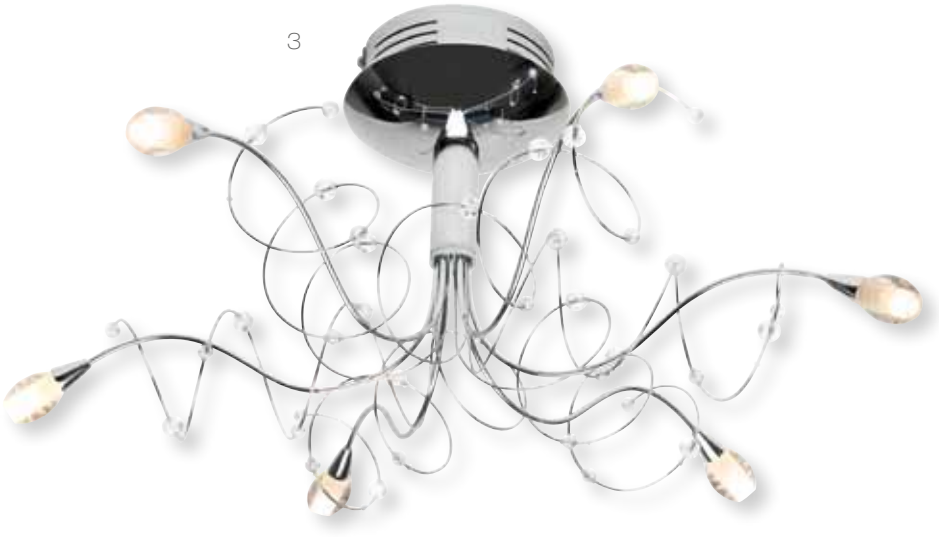

3

3. G93200/13

QT-LP9, G4, 6 x 20W

↕ 260mm ↔
⇢ ⌀ 570mm

92348/00, 92414/00

4 004353 054426

1 - 4

HALOGEN incl.

1 - 4

Olea

chrome
metal

1. G25395/15
QT-LP9, G4, 5 x 20W
↕ 450mm ↔ 250mm
⇢ 160mm ⌀
92411/00
4 004353 107054

1

2. G25390/15
QT-LP9, G4, 10 x 20W
↕ 1600mm ↔
⇢ ⌀ 580mm
92410/00
4 004353 107030

2

↕1600 mm

3. G25355/15
QT-LP9, G4, 5 x 20W
↕ 1600mm ↔
⇢ ⌀ 380mm
4 004353 107023

3

4. G25393/15
QT-LP9, G4, 3 x 20W
↕ 350mm ↔ 250mm
⇢ 150mm ⌀ 105mm
92519/05
4 004353 107047

4

Brilliant

Olea

chrome
metal

1. G25343/15

QT-LP9, G4, 3 x 20W

500mm

180mm

4 004353 107016

HALOGEN incl.

1 - 3

Fortuna

chrome/transparent
metal/glass

1. G06659/15

QT14, G9, 3 x 33W ☑
QT14, G9 max 3 x 40W ☐
↕ 1360mm ↔
⇢ ⌀ 199mm

4 004353 154911

2. G06669/15

QT14, G9, 6 x 33W ☑
QT14, G9 max 6 x 40W ☐
↕ 850mm ↔
⇢ ⌀ 600mm

4 004353 154928

3. G06696/15

QT14, G9, 6 x 33W ☑
QT14, G9 max 6 x 40W ☐
↕ 190mm ↔
⇢ 168mm ⌀ 600mm

4 004353 154935

1

2

↕850 mm

3

incl.

SEE OTHER VERSION ON PAGE 366-367

Fortuna

chrome/transparent
metal/glass

1. G06648/15

QT14, G9, 1 x 33W ☑
QT14, G9 max 1 x 40W ☐

↕ 420mm ↔
⌀ 162mm

4 004353 154904

HALOGEN incl.

1 - 4

Giulietta

chrome/frosted glass
metal/glass

1. G07635/15
QT14, G9, 4 x 33W ☑
QT14, G9 max 4 x 40W ☐
↕ 110mm ↔ 550mm
⇢ 200mm ⌀

4 004353 154768

2. G07610/15
QT14, G9, 1 x 33W ☑
QT14, G9 max 1 x 40W ☐
↕ 280mm ↔ 80mm
⇢ 110mm ⌀

4 004353 154751

3. G07695/15
QT14, G9, 5 x 33W ☑
QT14, G9 max 5 x 40W ☐
↕ 660mm ↔ 460mm
⇢ 400mm ⌀ 430mm

4 004353 154799

4. G07659/15
QT14, G9, 3 x 33W ☑
QT14, G9 max 3 x 40W ☐
↕ 1530mm ↔
⇢ ⌀ 300mm

4 004353 154782

1

2

3

4

Giulietta

chrome/frosted glass
metal/glass

1. G07642/15

QT14, G9, 2 x 33W ☑
QT14, G9 max 2 x 40W ☐

↕ 400mm ↔
⇢ 175mm ⌀ 177mm

4 004353 154775

Bona

white/white pattern
metal/glass

1. G10573/05

QT-LP9, G4 max 5 x 20W

↕ max 1700mm ↔ 700mm

92462/05, 92406/00

4 004353 107573

ENERGY SAVING SUITABLE

1 - 4

Bona

white/white pattern
glass/metal/plastic

1

↕750 - 1400 mm

2

1. 10578/05

A60, E27 max 1 x 60W

↕ max 1400mm ↔

⇢ ⌀ 400mm

92461/05

4 004353 107566

2. 10599/05

C35, E14 max 3 x 40W

↕ 115mm ↔

⇢ ⌀ 380mm

4 004353 106712

3. 10570/05

A60, E27 max 1 x 60W

↕ 1560mm ↔

⇢ ⌀ 250mm

92460/05

4 004353 106705

4. 10548/05

A60, E27 max 1 x 60W

↕ 250mm ↔ 250mm

⇢ 250mm ⌀ 250mm

4 004353 106699

3

↕1560 mm

4

SEE OTHER VERSION ON PAGE 368

ENERGY SAVING SUITABLE

1 - 3

Lio

brushed nickel/brown-beige deco
metal/glass

1. 67270/70
A60, E27 max 1 x 60W
↕ 1400mm ↔
⌀ 450mm
4 004353 098956

2. 67299/70
C35, E14 max 3 x 40W
↕ ↔
⌀ 400mm
4 004353 090066

3. 67298/70
C35, E14 max 2 x 40W
↕ ↔
⌀ 300mm
4 004353 090059

1

↕1400 mm

2

3

Brilliant

Lio

brushed nickel/brown-beige deco
metal/glass

1. G67261/70

QT-DE12, R7S, 1 x 230W ☑
QT14, G9, 1 x 25W ☑

↕ 1800mm ↔
⇢ 390mm ⌀ 380mm

92436/70, 92435/70

4 004353 090080

1 - 2 | 1 - 2 | HALOGEN incl. 1 - 2

Mailin

brushed nickel/white
metal/glass

1. G32373/05
QT-LP9, G4, 5 x 20W
↕ max 1640mm ↔ 705mm
92365/05, 92406/00
4 004353 083952

2. G32369/05
QT-LP9, G4, 6 x 20W
↕ max 1640mm ↔ 750mm
92365/05, 92401/00
4 004353 083938

1

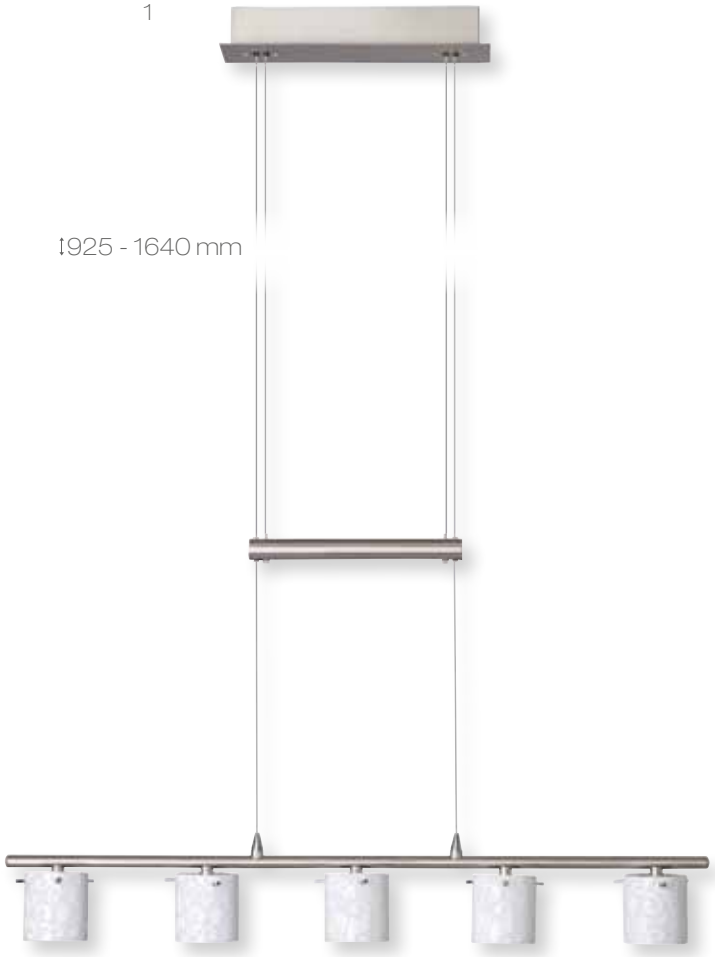

2

SEE OTHER VERSION ON PAGE 369

Mailin

brushed nickel/white
metal/glass

1. G32376/05

QT-LP12, GY 6,35, 3 x 35W

↕ max 1640mm ↔ 505mm

92365/05, 92406/00

4 004353 114526

ENERGY SAVING SUITABLE

1 - 3

Louise

white or black
metal/glass

1. 93204/05

C35, E14 max 5 x 40W

↕ 1400mm ↔
⇢ ⌀ 450mm

92397/05

4 004353 062797

2. 93222/06

C35, E14 max 2 x 40W

↕ 350mm ↔ 400mm
⇢ 210mm ⌀

92397/06

4 004353 079313

3. 93222/05

C35, E14 max 2 x 40W

↕ 350mm ↔ 400mm
⇢ 210mm ⌀

92397/05

4 004353 079306

1

↕1400 mm

2

3

ENERGY
SAVING
SUITABLE
Brilliant
1
Louise
white or black
metal/glass
1. 93204/06
C35, E14 max 5 x 40W
1400mm
450mm
92397/06
4 004353 062803

ENERGY SAVING SUITABLE

1 - 2

Tosca

metal/textile

1. 93217/05

chrome/white

C35, E14 max 3 x 40W

↕ 1400mm ↔

⇢ ⌀ 460mm

4 004353 074554

2. 93217/64

chrome/purple

C35, E14 max 3 x 40W

↕ 1400mm ↔

⇢ ⌀ 460mm

4 004353 074547

1

↕1400 mm

2

↕1400 mm

Tosca

metal/textile

1.93217/06

chrome/black

C35, E14 max 3 x 40W

↕ 1400mm ↔ ⌀ 460mm

4 004353 074561

1 - 3

1 - 3

Clarisse

brown-gold
metal

1. G07469/20

QT-LP9, G4, 6 x 20W

↕ 1200mm ↔ 780mm
⇢ ⌀ 800mm

4 004353 154744

2. G07406/20

QT-LP9, G4, 6 x 20W

↕ 45mm ↔ 780mm
⇢ ⌀

4 004353 154713

3. G07464/20

QT-LP9, G4, 4 x 20W

↕ 1450mm ↔
⇢ ⌀ 330mm

4 004353 154737

1

↕420 mm

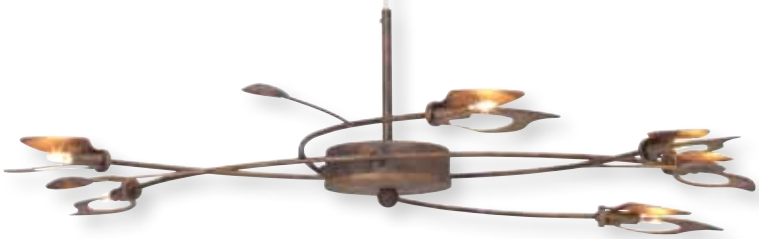

2

3

incl.
E
HALOGEN
incl.
Brilliant
Clarisse
brown-gold
metal
1. G07442/20
QT-LP9, G4, 2 x 20W
420mm
280mm
207mm
4 004353 154720
1

HALOGEN incl.

1 - 4

Yasmin

brown-gold
metal/glass

1. G82090/20
QT14, G9, 10 x 33W ☑
QT14, G9 max 10 x 40W ☐
↕ 1000mm ↔
⇢ ⌀ 720mm
92303/00
4 004353 060502

2. G82073/20
QT14, G9, 5 x 33W ☑
QT14, G9 max 5 x 40W ☐
↕ 1000mm ↔
⇢ ⌀ 540mm
92303/00
4 004353 060496

3. G82062/20
QT14, G9, 2 x 33W ☑
QT14, G9 max 2 x 40W ☐
↕ 360mm ↔ 230mm
⇢ 135mm ⌀
92303/00
4 004353 060489

4. G82059/20
QT14, G9, 3 x 33W ☑
QT14, G9 max 3 x 40W ☐
↕ 1550mm ↔
⇢ ⌀ 500mm
92303/00
4 004353 060472

1

2

3

4

Yasmin

brown-gold
metal/glass

1. G82048/20

QT14, G9, 1 x 33W ☑
QT14, G9 max 1 x 40W ☐

↕ 440mm ↔ 240mm

92303/00

4 004353 060465

1 - 2

1 - 2

Silvana

brown antique/white
metal/glass

1. G56790/20

QT-LP9, G4, 12 x 10W

↕ 260mm ↔
⇢ ⌀ 770mm

92310/91, 92406/00

4 004353 060212

2. G56793/20

QT-LP9, G4, 3 x 20W

↕ 460mm ↔ 220mm
⇢ 70mm ⌀

92310/91

4 004353 060236

1

2

ENERGY SAVING SUITABLE

Brilliant

Cassino

old copper
metal

1.81473/56

C35, E14 max 5 x 40W

↕ 1060mm ↔

⌀ 570mm

4 004353 976483

1

↕1060 mm

ENERGY SAVING SUITABLE

1 - 4

Elena

black/white alabaster
metal/glass

1. 66773/76
D45, E14 max 5 x 40W
↕ 900mm ↔
⇢ ⌀ 580mm
92464/94
4 004353 093036

2. 66792/76
D45, E14 max 2 x 40W
↕ 310mm ↔ 400mm
⇢ 200mm ⌀
92464/94
4 004353 093050

3. 66747/76
D45, E14 max 1 x 40W
↕ 315mm ↔
⇢ ⌀ 185mm
92466/94
4 004353 093012

4. 66760/76
A60, E27 max 1 x 100W
↕ 1800mm ↔
⇢ ⌀ 360mm
92465/94
4 004353 093029

1

↕900 mm

2

3

4

ENERGY SAVING SUITABLE

1 - 3

Murcia

brown/white
metal/glass

1

↕1400 mm

2

3

1. 02170/31
A60, E27 max 1 x 60W
↕ 1400mm ↔ ⌀ 390mm
92479/31

4 004353 102127

2. 90207/31
A60, E27 max 1 x 60W
↕ 100mm ↔ ⌀ 290mm

4 004353 993312

3. 02148/31
D45, E14 max 1 x 40W
↕ 440mm ↔ 225mm ⌀

92478/31

4 004353 102103

SEE OTHER VERSION ON PAGE 377

ENERGY SAVING SUITABLE

1 - 4

Fiore

brown/alabaster
metal/glass

1. 81910/58
A60, E27 max 1 x 75W
↕ 400mm ↔
⇢ 240mm ⌀ 240mm
91694/20
4 004353 053511

2. 81970/58
A60, E27 max 1 x 100W
↕ 1360mm ↔
⇢ ⌀ 400mm
91693/20
4 004353 053542

3. 81971/58
A60, E27 max 2 x 75W
↕ 1420mm ↔ 770mm
⇢ 220mm ⌀
91695/20
4 004353 053559

4. 81960/58
A60, E27 max 1 x 100W
↕ 1840mm ↔
⇢ ⌀ 320mm
91695/20
4 004353 053535

1

2

↕1360 mm

3

↕1420 mm

4

Fiore

brown/alabaster
metal/glass

1. 81949/58

A60, E27 max 1 x 75W

450mm

320mm

91695/20

4 004353 053528

1 - 2

HALOGEN incl.

1 - 2

Los Angeles

old copper/red-orange-alabaster
metal/glass

1. G72274/19
QT-LP9, G4, 6 x 20W ☑
↕ max 1500mm ↔ ⌀ 500mm
91685/19, 92401/00
4 004353 069802

2. G72269/19
QT-LP9, G4, 6 x 20W ☑
↕ max 1500mm ↔ 750mm ⌀
91685/19, 92401/00
4 004353 069796

3. G72247/19
QT14, G9, 1 x 33W ☑
QT14, G9 max 1 x 40W ☐
↕ 400mm ↔ ⌀ 110mm
91703/19
4 004353 069772

1

↕910 - 1500 mm

2

↕1037 - 1500 mm

HALOGEN incl.

3

SEE OTHER COLOUR ON PAGE 88,134

Antwerpen

old copper/red-orange-alabaster
metal/glass

1

↕960 - 1600 mm

1. G70273/19

QT-LP9, G4, 5 x 20W

↕ max 1600mm ↔ 720mm

91685/07, 92406/00

4 004353 069765

SEE OTHER COLOUR ON PAGE 89

1 - 2

HALOGEN incl.

1 - 2

Los Angeles

old copper/champagne
metal/glass

1. G72274/56
QT-LP9, G4, 6 x 20W ☑
↕ max 1500mm ↔ ⌀ 500mm
91685/83, 92401/00
4 004353 052972

2. G72269/56
QT-LP9, G4, 6 x 20W ☑
↕ max 1500mm ↔ 750mm ⌀
91685/83, 92401/00
4 004353 052392

3. G72247/56
QT14, G9, 1 x 33W ☑
QT14, G9 max 1 x 40W ☐
↕ 400mm ↔ ⌀ 110mm
91703/83
4 004353 052378

1

↕910 - 1500 mm

2

↕1037 - 1500 mm

HALOGEN incl.

3

SEE OTHER COLOUR ON PAGE 88,132

1 - 2

HALOGEN incl.

1 - 2

Antwerpen

old copper/champagne-alabaster
metal/glass

1

↕960 - 1600 mm

1. G70273/56

QT-LP9, G4, 5 x 20W

↕ max 1600mm ↔ 720mm

91600/83, 92406/00

4 004353 048647

2. G70276/56

QT-LP12, GY6,35, 3 x 35W

↕ max 1600mm ↔ 570mm

91600/83, 92406/00

4 004353 048449

2

↕960 - 1600 mm

SEE OTHER COLOUR ON PAGE 89

ENERGY SAVING SUITABLE

1 - 2

Carlyn

satin chrome/wood light/white
metal/wood/textile

1. 09958/75

A60, E27 max 1 x 60W

↕ 1630mm ↔
⇢ 800mm ⌀ 280mm

4 004353 156137

2. 09970/75

A60, E27 max 1 x 60W

↕ 1000mm ↔
⇢ ⌀ 420mm

4 004353 156144

1

2

Carlyn

satin chrome/wood light/white
metal/wood/textile

1. 09949/75

D45, E14 max 1 x 40W

↕ 530mm ↔
⇢ 500mm ⌀ 160mm

4 004353 156120

ENERGY SAVING SUITABLE

1 - 2

Aline

wood light/white
metal/wood/textile

1. 07958/75

A60, E27 max 1 x 60W

↕ 1580mm ↔
⇢ ⌀ 385mm

4 004353 154829

2. 07948/75

D45, E14 max 1 x 40W

↕ 510mm ↔
⇢ ⌀ 220mm

4 004353 154812

Coralie

wood light/white
metal/wood/textile

3. 08810/75

D45, E14 max 1 x 40W

↕ 210mm ↔ 144mm
⇢ 175mm ⌀

4 004353 154836

1

3

2

ENERGY SAVING SUITABLE

1 - 4

Coralie

wood light/white
metal/wood/textile

1

1. 08879/75

A60, E27 max 2 x 60W

↕ 950mm ↔ 635mm
⇢ 290mm ⌀

4 004353 154867

2

2. 08858/75

A60, E27 max 1 x 60W

↕ max 1700mm ↔
⇢ 230mm ⌀

4 004353 154850

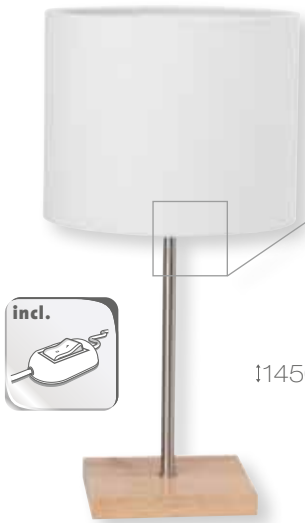

3

3. 08848/75

A60, E27 max 1 x 60W

↕ max 620mm ↔
⇢ 220mm ⌀

4 004353 154843

↕1450 - 620 mm

↕1400 - 1700 mm

ENERGY SAVING SUITABLE

1 - 3

Enzio

pewter
metal

1. 66472/43

D45, E14 max 4 x 40W
QD45, E14, 4 x 28W

↕ max 1100mm ↔ 1100mm
⇢ 400mm ⌀ 220mm

4 004353 139383

2. 66476/43

D45, E14 max 3 x 40W
QD45, E14, 3 x 28W

↕ max 1400mm ↔
⇢ ⌀ 660mm

4 004353 139390

3. 66448/43

D45, E14 max 1 x 40W
QD45, E14, 1 x 28W

↕ 440mm ↔
⇢ 380mm ⌀

4 004353 139376

1

↕750 - 1100 mm

SEE OTHER COLOUR ON PAGE 84-87

2

↕820 - 1100 mm

3

Enzio

pewter
metal

1. 66411/43

D45, E14 max 1 x 40W
QD45, E14, 1 x 28W

250mm ↔ 120mm
310mm ⌀ 220mm

4 004353 139758

ENERGY SAVING SUITABLE

1 - 4

Rider

cream shiny/chrome
metal/glass

1. 04376/75
D45, E14 max 3 x 25W
↕ 1000mm ↔
⇢ ⌀ 360mm
4 004353 151132

2. 04370/75
D45, E14 max 1 x 25W
↕ 1000mm ↔
⇢ ⌀ 170mm
4 004353 151118

3. 04358/75
QD45, E14 max 1 x 28W
↕ 1500mm ↔
⇢ ⌀ 170mm
4 004353 151095

4. 04347/75
QD45, E14 max 1 x 28W
↕ 280mm ↔
⇢ ⌀ 170mm
4 004353 151071

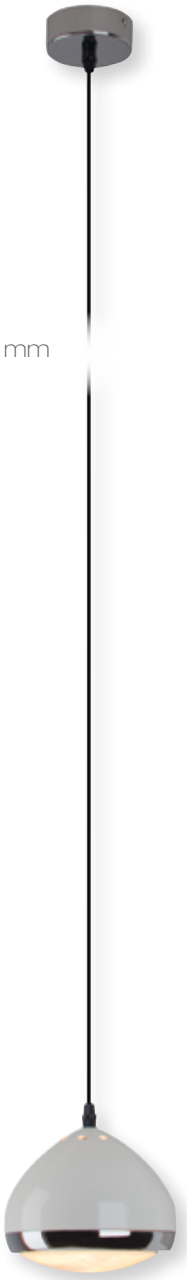

SEE OTHER VERSION ON PAGE 392

ENERGY SAVING SUITABLE

1 - 4

Rider

black/chrome
metal/glass

1

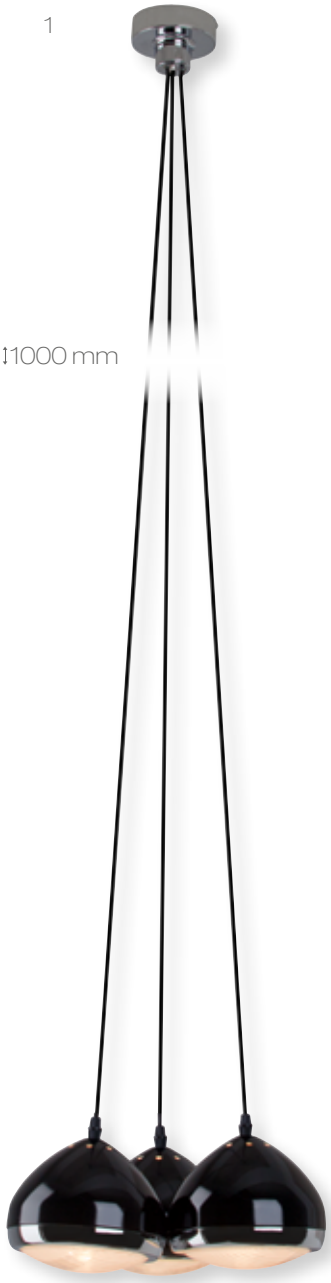

↕1000 mm

1. 04376/06

D45, E14 max 3 x 25W

↕ 1000mm ↔

⌀ 360mm

4 004353 151149

↕1000 mm

2. 04370/06

D45, E14 max 1 x 25W

↕ 1000mm ↔

⌀ 170mm

4 004353 151125

2

3. 04358/06

QD45, E14 max 1 x 28W

↕ 1500mm ↔

⌀ 170mm

4 004353 151101

3

4. 04347/06

QD45, E14 max 1 x 28W

↕ 280mm ↔

⌀ 170mm

4 004353 151088

4